Arm Type Blood Pressure Monitor

User Manual

Version: V1.0
Revised time :2023-12-6

Preface

Dear user:

Thank you for choosing our arm type blood pressure monitor. Before using this arm type blood pressure monitor, please read the user's manual carefully and use it accordingly. Please keep the user's manual properly for reference at any time. (The pictures in this manual are for reference only)

Product Brief Introduction:

The full name of this product is arm type blood pressure monitor. It's suitable for human blood pressure and pulse measurement.

The blood pressure monitor adopts the intelligent pressure method, which can measure your blood pressure to a suitable value automatically according to your own blood pressure value. It can effectively reduce the discomfort caused by incorrect pressure, shorten the measurement time, and prolong the service life of the arm cuff at the same time.

This blood pressure monitor has the memory function of 99 groups of measuring data of two people, which can save the data separately. It can display the average reading of the latest 3 groups of measurement results.

This blood pressure monitor has the function of blood pressure classification, which is convenient for you to judge whether your blood pressure is normal or not.

This blood pressure monitor has voice broadcast function (optional). During measurement and recall the memory, there will be voice operation tips.

Contents

Safety Precautions 5

1. Product Introduction 8

1.1 Intended use 8

1.2 Contraindications 8

1.3 The part of machine 8

1.4 Display Screen 9

1.5 Functional Description 9

2. Lithium battery/Adapter for use 9

3 Initial Setting 10

3.1 User Setting 10

3.2 Time Setting 11

3.3 Sound setting（Optional functions） 11

3.4 BP Unit Setting 12

4.Measure blood pressure 12

4.1Usage of NIBP Cuff 12

4.2 The Correct measurement method 13

4.3 The Error measurement method 13

4.4 Operation steps of blood pressure measurement 14

4.5Answers to the question during measurement 15

5. Memory function 16

5.1 Memory data viewing 16

5.2 Delete the memory value 16

6.Maintenance and Storage 16

6.1Maintenance method 17

6.2 Storage method 17

6.3 Calibration and Service 17

6.4Waste disposal 18

7 Manufacturer's Declaration of the EUT 18

Appendix 22

I.Product Specifications 22

II. Blood pressure classification instructions 25

III. Error message and the cause of error correspondence table 25

Services 26

Components 26

Safety Precautions

Warnings and graphic symbols in the user's manual are aimed at enabling users to use the product safely and correctly, so that avoid any damages to users and the others. Specific meanings are as follows:

	Caution
	Enforcement： to represent compulsive behavior, namely matters must to be observed when using the product
	Prohibition: to stand for prohibited contents, namely matters not allowed to do when using the product
	Prohibition of Disassembly
	Caution of electric current
	Caution of fire
	Type BF applied part
	Refer to instruction manual
	Manufacturer
	Date of manufacture
SN	Serial number
	separate collection for electrical and electronic equipment
	Keep dry
#	Model number

	Use-by date
MD	Medical device
	Consult instructions for use
UDI	Unique Device Identifier
	This way up
	Keep away from sunlight
LOT	Batch code
	Humidity limitation
	Temperature limit
IP21	First characteristic numeral 2: Against ingress of solid foreign objects:≥12.5mm diameter Second characteristic numeral 1 Against ingress of water with harmful effects: vertically dripping
	Bluetooth icon: When the device successfully connects to another device through Bluetooth connection, the Bluetooth icon lights up
	● Pregnancy ,arrhythmia, diabetes, poor blood circulation or stroke patients, please use the product under the guidance of a doctor. ● It is very dangerous for the patients to make self-judgment and self-treatment according to the measurement results. Please follow the guidance of the doctor, self- judgment is likely to deteriorate the patient's condition. ● There may be a risk, such as arm numbness or pain, that may be caused by over inflation of the gasbag.

	● The application of the CUFF over a wound, as this can cause further injury. ● For the sake of safety, please keep the product in the place where the child is not easy to touch. ● The application of the cuff and its pressurization on any limb where intravascular access or therapy, or an arterio-venous (A-V) shunt is present because of temporary interference with blood flow and could result in injury to the patient; ● The information that pressurization of the cuff can temporarily cause loss of function of simultaneously used monitoring the blood pressure monitor on the same limb ● The need to check that operation of the blood pressure monitor does not result in prolonged impairment of the circulation of the blood of the patient. ● Avoid taking measurement on the arm on the side of a mastectomy or lymph node clearance. ● Should be kept out of reach of children. ● Any serious incident that has occurred in relation to the device should be reported to the manufacturer and the competent authority of the Member State in which the user and/or patient is established.
	● Infants and children who can not express their thoughts are prohibited to use the product, because they will be the cause of the accident or dispute. ● Do not use it for purposes other than blood pressure measurement. It can be a cause of accident or dispute. ● Please do not use chemical reagents such as thinner, alcohol, gasoline to clean this product. ● Do not beat the product heavily or fall from a height. ● Please be sure to use the special arm cuff of this product, otherwise it can not be accurately measured ● Do not use the mobile phone near the machine. There is a risk of making the machine to malfunction.
	● Do not disassemble, repair or reconstruction of the machine and the arm cuff of the arm type blood pressure monitor, otherwise it can not be measured correctly

⚠	● Do not force a bending of the arm cuff or the air tube.Otherwise, the blood flow will be affected and the patient will be injured. ● Don't pressure the product before the arm cuff is twined around the arm ● As the battery leakage can damage the product, so please pay attention to the following points ● Do not modify this equipment without authorization of the manufacturer ● The blood pressure monitor is not allowed serviced or maintained while in use with the patient.
🔥	● Please be sure to use the appropriate adapter. Use the power socket separately, otherwise it is likely to cause a fire or electric shock.
⚡	● Please do not use wet hands to pull the plug on the adapter, otherwise it may cause electric shock or injury.

1. Product Introduction

1.1 Intended use

The Arm blood pressure monitor is used for measuring blood pressure and pulse rate in adult patient.The monitor can be used in hospitals, families, schools and medical centers by healthcare personnel or adult.

1.2 Contraindications

Not found

1.3 The part of machine

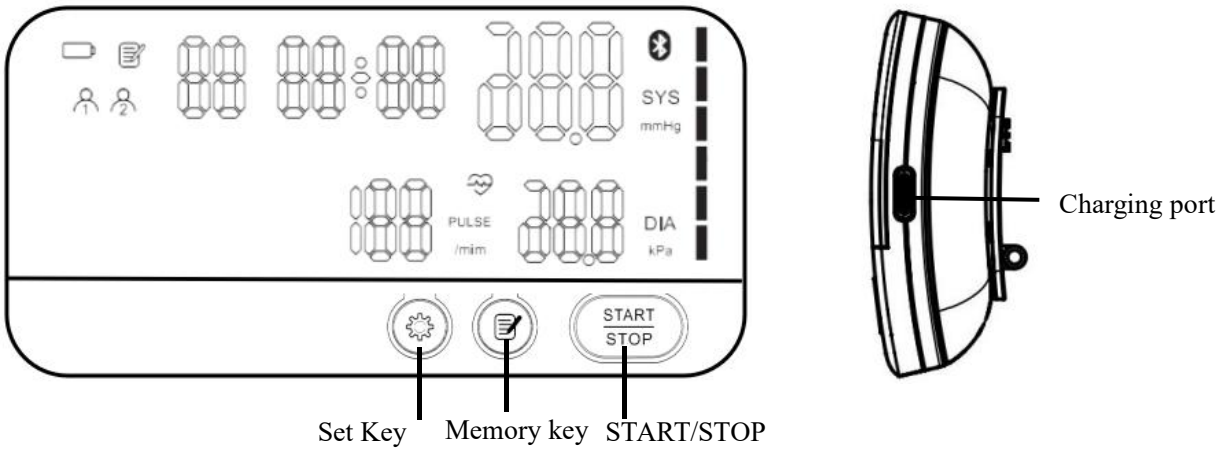

1.4 Display Screen

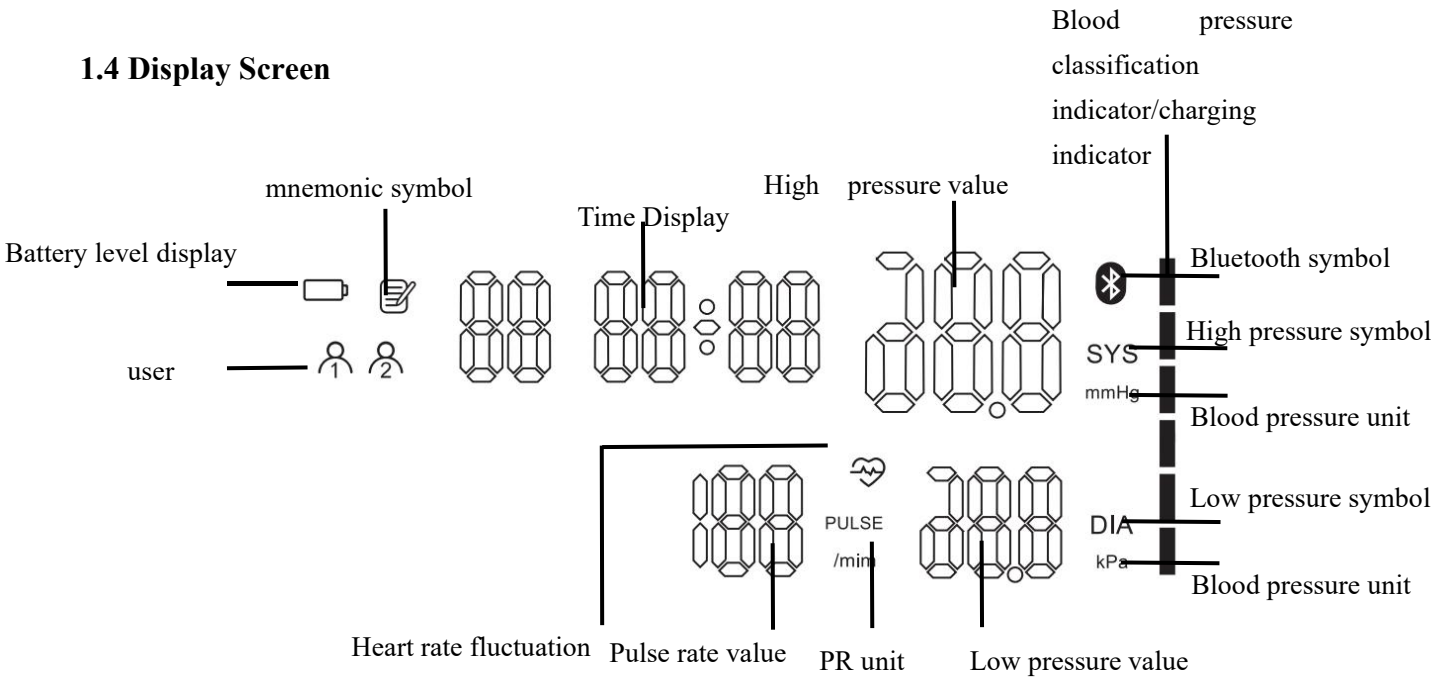

1.5 Functional Description

1) Measurement: Oscillographic measurement ;

2) The results showed that: high pressure / low pressure / pulse ;

3) Unit Conversion: blood pressure units kPa / mmHg conversion (the default boot unit is mmHg);

4) Memory Group: Two sets of memory, each 99 measurements results of memory ;

5) Clock function: Set of year, month, day, hour, minute ;

6) Low power testing: any working-state detecting low power, LED displays " " symbol prompts low power ;

7) Blood pressure classification indicator: blood pressure classification indicates blood pressure health, see Appendix Table II ;

8) Error: See Appendix Table III;

9) Over pressure protection function: pressure over 295mmHg (20ms) is automatically and quickly exhaust ;

10) Auto power off function: No action for 2 minutes then automatic shutdown .

2. Lithium battery/Adapter for use

1) This blood pressure monitor uses lithium battery power supply, please ensure sufficient power when using.

2) In use, if there is "insufficient power", it means that the lithium battery has been exhausted, and the machine cannot be measured, please charge it in time.

3) When charging, the charging icon appears in the display.

4) When charging is complete, please unplug the power adapter in time.

⚠**Note**

- When off the power, cut off the power socket then cut off the adapter and blood pressure monitor.
- Be sure to use a dedicated adapte.
- In order to prolong the service life of the lithium battery, please charge the machine in time when the lithium battery is insufficient
- If this device is not used for a long time (more than 6 months), it is easy to cause the electrode material passivation and lead to the degradation of lithium battery performance. It is recommended to use it frequently.
- Do not use the lithium battery to measure blood pressure while charging.

3 Initial Setting

This device can automatically memorize 2×99 groups of measured value in memory and calculate the average value of latest three groups of measuring results. It will store correct user and measuring time if they are set correctly, otherwise, user and measuring time cannot memorized correctly.

Please conduct initial setting before the first measurement if you want to use memory and average value function. Initial setting includes settings of user, time, blood pressure unit and volume（Optional functions）.

3.1 User Setting

In the shutdown state,long press SET key until the user symbol " " on screen starts flashing up , press the MEMORY key to switch" "or" " for choosing user, then press SET key for confirming and switch to year setting mode at the same time, if not to choose the system defaults user " ".

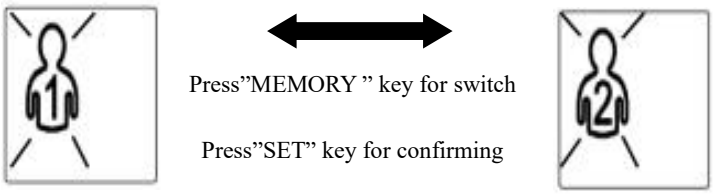

3.2 Time Setting

We can get known from 3.1, press SET key under user mode and it switches to year setting mode; the screen displays”2016” and flashes, press MEMORY key, value increment can switch between 2016-2035, when the year to be set appears, press SET key to confirm and it switches to”month”,”date” setting mode at the same time, it means the value stands for month is in flashing state, press MEMORY key, value increment can switch between 1-12, when the month to be set appears, press SET key to confirm, the value stands for date is now in flashing state, it is the time to set date, press MEMORY key, value increment can switch between 01-31, press SET key to confirm and it switches to”hour”, “minute” setting mode at the same time, value stands for hour is in flashing state now, press SET key, value increment switches between 0 to 23 . When the hour to be set appears, press SET key to confirm, the value stands for minute is now in flashing state, it is the time to set minute, press MEMORY key, value increment can switch between 00-59, when minute to be set appears, press SET key to confirm and it switches to”volume” setting mode at the same time, namely”SP” setting mode.

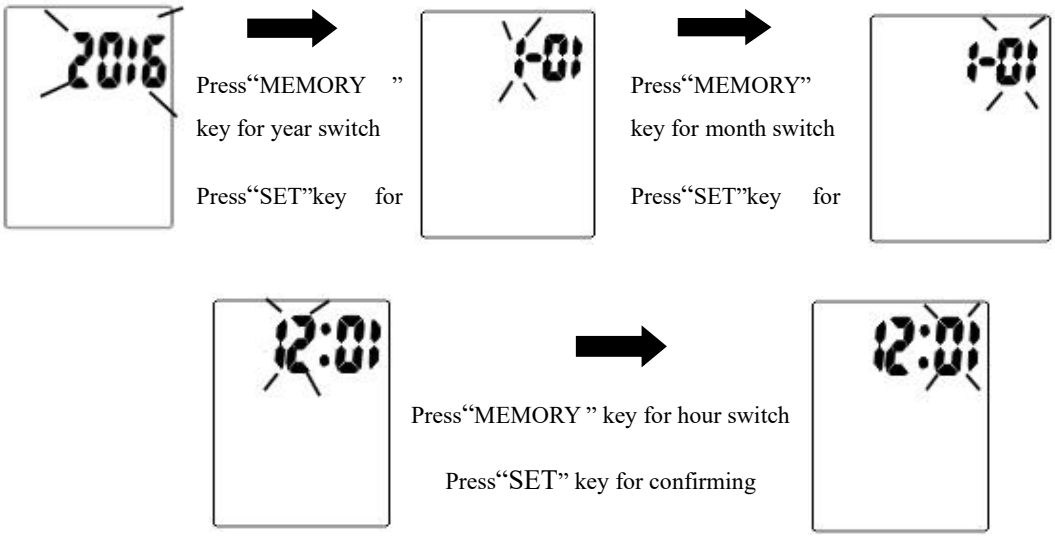

Note: Keep on pressing the MEMORY key,the number will increase fast.

3.3 Sound setting（Optional functions）

We can get known from 3.2, after setting up time, press SET key to confirm and switch to "SP" mode at the same time, the "ON" or "OFF" is in a flashing state now. Press MEMORY key to choose, when set to "ON", there is a voice prompt when BP monitor is under measurement and viewing memory; when set to

“OFF”, there is no voice prompt. After choosing it, press SET key for confirming and switch to”BP Unit” mode at the same time. The system defaults “ON” if you didn’t choose anything.

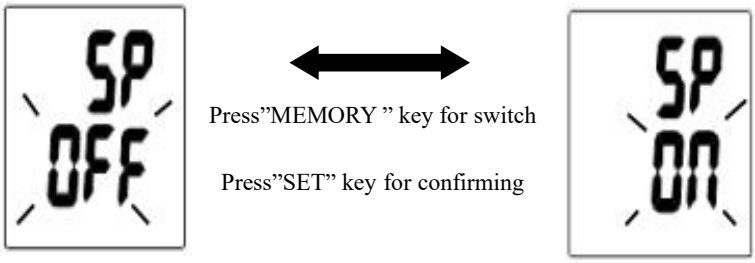

Note: If the instrument is optional without voice, no need to set the sound.

3.4 BP Unit Setting

We can get known from 3.3, after setting up volume, press SET key to confirm and switch to "BP Unit" mode at the same time, the "mmHg" or "kPa" is in a flashing state now. the system defaults mmHg as blood pressure unit if there is no switch. After choosing it, press SET key for confirming and it is shutdown at the same time.

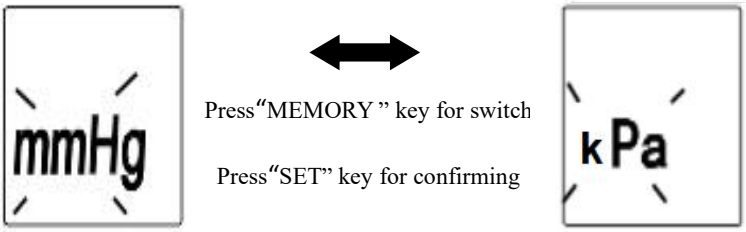

4.Measure blood pressure

4.1Usage of NIBP Cuff

1)According to the instruction on the cuff, put the cuff on the measured upper arm, point the arrow to the hand, and make the lower edge of the cuff 2cm-3cm away from the elbow joint.

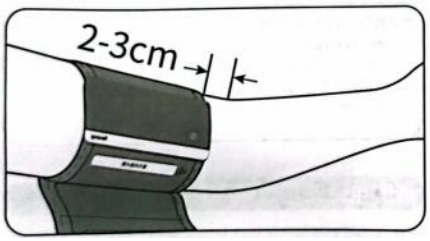

2) The gas nozzle is located on the inside of the arm, pull the cuff and stick the tape.

Note: The cuff should be snugly wrapped around the upper arm to prevent too tight or too loose.

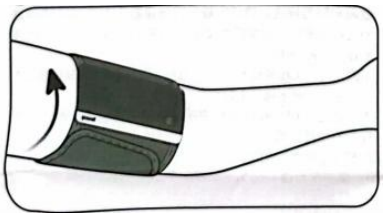

4.2 The Correct measurement method

The left arm, right arm are all ok to measure,Be bare arms or only wear thin clothes to measure. Please measure at a temperature suitable room(refer to “work condition” of “AppendixI.Product Specifications”).

1）Do it comfortably and naturally, with your feet flat on the floor， legs uncrossed

2）Put your elbows on the table ;

3)The cuff height should be consistent with the heart;

4)The palm shall be upward, Relax the body.

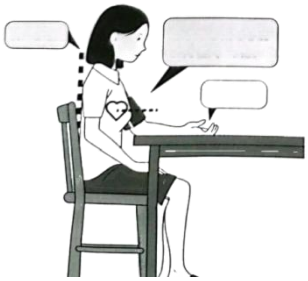

4.3 The Error measurement method

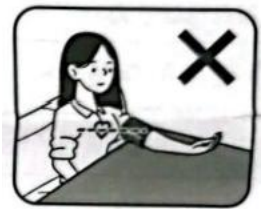	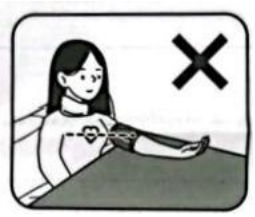
Roll up one's sleeve	Thicker clothes

Bend over and lean forward	Speaking or moving during measurement

⚠**Attention**

- If you wear thick clothes, don't roll up your sleeves, but take off and measure it.
- In order to accurately measure, please pay attention to the correct winding cuff
- Please be the same pose for blood pressure measurement,every day at the same time ,with the same arm.
- The location of the cuff will cause changes of measurement results.
- Don't touch the machine ,cuff during measuring.
- You should keep quiet when start measuring, the body should be in a state of relaxation.
- Please be quiet for 4~5 minutes before measurement.
- Relax your body, don't let muscle activity.
- Don't talk or move when you are measuring.
- Please wait for 2-3 minute if you wan to measure again.
- Do not use mobile phones and other mobile devices in the vicinity of the machine.

4.4 Operation steps of blood pressure measurement

The machine has 2 kinds of BP units,which is mmHg and kPa,please refer to the part for the specific method of setting.

Take the mmHg value as an example in the following explanation.

1）Press the "START / STOP" key, the machine will automatically return to zero, arm cuff with automatic start filling with air, the pump started to inflate the cuff, the screen will display the pressure changes in the cuff. In the process of inflation,arm type blood pressure monitor also detects the pulse, so the whole measurement process, please do not move the arm,keep the stationary state.

2）When the air in cuff reaches a stable pressure, pump stop inflating, the pressure cuff gradually decrease and will be displayed on the screen at the same time, the heart icon will flash .

3）After the measurement, the machine will simultaneously exhaust and displays your blood pressure value and the pulse number.

Note: the machine will automatically save the blood pressure value and the pulse rate.

Interrupt measurement：

If you need to interrupt the measurement for some reason (for example, you feel uncomfortable), at any time, press the "START / STOP" key, the machine will automatically reduce the arm with air pressure, interrupt measurement.

Important hints：

For the same user, the interval between the two measurements is at least 2-3 minutes.Between

the two measurements of waiting is mainly to let the artery restored to the state before the meas urement of blood pressure.

In the measurement process, if the body is moving, it will cause the measurement result is not accurate, or measure the failure, and it will display error message. In this case, please repeat the measurement process, and keep quiet until the end of the measurement.

If Irregular Heartbeat(IHB) brought by common arrhythmias is detected in the procedure of blood pressure measurement, a signal of "♥"will be displayed.Under this condition, the blood pressure monitor can keep function,but the results may not be accurate,it's suggested that you consult with your physician for accurate assessment.

4.5Answers to the question during measurement

Anomalies	Cause	Correction
A high (low) anomaly blood pressure measurements	Whether wrap the cuff properly	wrap the cuff properly
	Whether chatting or moved the arm during measurement	Keep quite and body peaceful then measure again
	Whether the sleeves rolled up too tight	Take the too tight coat off and measure again
No inflation	Whether the cuff leak	wrap the cuff properly
	Whether the plug connected well with the cuff	Please connect correctly
Cuff leak in a short time	Whether the cuff wrap too loose	Please wrap the cuff correctly
Not working after press the start button		Please reconnecting power and measure again
During measurement suddenly power off	When not use for a long time, the temperature variation may make the battery power exhausted	Please charge in time
No display after press the start button	Whether the power exhausted	Please charge in time
Other anomalies		Please press the start button and check again or charge in time, if still can't measure please connect After-sales service department.

5. Memory function

5.1 Memory data viewing

This blood pressure storing 2x99 set memory value, each measurement it will automatically stored. When it stored 2x99 set memory value, the old value will be covered by the new one. It can show the latest 3 times average value.

⚠ **Note**

- **In order to make a note of measurement correctly, before measurement, please make sure set the right user and time. Under one user, it has stored 99 set data, when you save the 100th set date, the earliest one date will be deleted.**

5.1.1 Read memory record

Short press the MEMORY key it will show the latest 3 times average value. It will appear “AVG” in the the screen;

⚠ **Note**

- When the number of memory value less than 3 set, like there are 2 set memory value, the memory button will show this 2 set average value, if there is 1 set memory value, the memory button will show this 1 set average value, that is this 1 set measure value.

5.1.2 Read the result

Press the MEMORY key in average mode, you can read the latest 1 time measurement value,press the MEMORY key repeatedly to cycle between the previous measurement values.

5.2 Delete the memory value

Long press the MEMORY key in the memory mode,all memory values will be deleted.

⚠ **Warning**

- This operation deletes all memory values, users need to operate carefully.

6.Maintenance and Storage

Be sure to keep the notes and other correct usage in the user manual, Failure to obey the regulations, the company doesn’t take responsibility of the quality.

6.1Maintenance method

- Using a soft dry cloth towel clean the unit, if it is very filthy you can wet the towel with water or neutral detergent, wring out it and wipe the unit.
- Use a soft, moistened cloth to clean the arm cuff,let the cuff dry completely.

⚠ Note

Please prevent water or other liquid seep into the blood pressure monitor.

⚠ **Suggestion**

Don't clean the host and cuff with naphtha, thinner or gasoline etc.

Don't wet the cuff or attempt to clean the cuff with water.

It is recommended to put disposable tissue under the sleeve to reduce cross contact.

6.2 Storage method

⚠ **Advice**

Do not place the blood pressure monitor in the following places:

- Easy splashing
- Direct sunlight, high temperatures, humidity, dust, full of corrosive gas places
- Some slant, vibrative, shock place .
- Some place storing chemicals or corrosive gas.

6.3 Calibration and Service

- The accuracy of this blood pressure monitor has been carefully tested and is designed for a long service life.
- It is recommended to calibrate the arm type blood pressure monitor once a year, by the manufacturer.

⚠ **Notes**

- If the performance is inconsistent with the description or changes, stop using immediately and contact the manufacturer.

- Do not use this product if you are allergic to ABS and other materials.
- Direct use in the environment of electromagnetic interference shall be avoided to prevent temporary influence on its accuracy.
- The product is suitable for professional use or domestic use.
- The correct use method is the key to the accuracy of measurement. Operators should have certain knowledge of blood pressure. The operating environment shall be in accordance with the instructions.
- Too frequent measurements can cause injury to the patient due to blood flow interference.
- The effects of degraded sensors and electrodes, or loosened electrodes, that can degrade performance or cause other problems.
- Please place the blood pressure monitor in a place where children, pets, etc. can not be touched, so as to prevent falling, biting and affecting the product performance.
- Do not use beyond the service life of the product, otherwise the accuracy of the instrument will be affected.
- The blood pressure monitor cannot be serviced and maintained during use.
- The blood pressure monitor should be avoided in places with poor ventilation and high dust and lint content.Avoid direct sunlight and strong light sources.
- If you need maintenance, please contact the manufacturer.

6.4Waste disposal

1. Please follow local laws to dispose of waste scrap.

2.Follow local ordinances and recycling instructions regarding to disposal or recycling of the device and device components, including used batteries and packaging box.

7 Manufacturer's Declaration of the EUT

Statement:

- The Arm type Blood Pressure Monitor or user should use the product in the electromagnetic environment specified in the following table, otherwise it may cause abnormal operation of the product.
- The internal structure of the Arm type Blood Pressure Monitor adds magnetic rings, magnetic beads, and conductive cloth to spray conductive paint to avoid electromagnetic interference, so as to prevent adverse events to patients and operators due to electromagnetic interference.
- Arm type Blood Pressure Monitor is a table-top equipment，it suitable for medical unit and home use.
- Warning: Use of this Arm type Blood Pressure Monitor adjacent to or stacked with other equipment should be avoided because it could result in improper observed to verify that they are operating normally.
- Warning： Use of accessories, transducers and cables other than those specified or provided by the

manufacturer of this equipment could result in increased electromagnetic emissions or decreased electromagnetic immunity of this equipment and result in impropre operation.

- Warning：Portable RF communications equipment (including peripherals such as antenna cables and external antennas) should be used no closer than 30cm (12 inches) to any part of the Arm type blood pressure monitor, including cables specified by the manufacturer. Otherwise, degradation of the performance of this arm type blood pressure monitor could result.

Guidance and manufacturer´s declaration – electromagnetic emission – for all EQUIPMENT AND SYSTEMS

Guidance and manufacturer´s declaration – electromagnetic emission		
The Arm type Blood Pressure Monitor is intended for use in the electromagnetic environment specified below. The customer or the user of Arm type Blood Pressure Monitor should assure that it is used in such an environment.		
1	Emissions test	Compliance
2	RF emissions CISPR 11	Group 1
3	RF emissions CISPR 11	Class B
4	Harmonic emissions IEC 61000-3-2	Class A
5	Voltage fluctuations / flicker emissions IEC 61000-3-3	Compliance

Guidance and manufacturer's declaration – electromagnetic immunity – for all EQUIPMENT and SYSTEMS

Guidance and manufacturer’s declaration – electromagnetic immunity		
The arm type blood pressure monitor is intended for use in the electromagnetic environment specified below. The customer or the user of the arm type blood pressure monitor should assure that it is used in such an environment.		
Immunity test	**EN 60601 test level**	**Compliance level**
Electrostatic discharge (ESD) IEC 61000-4-2	± 8 kV contact ± 15 kV air	± 8 kV contact ± 15kV air
Electrostatic transient / burst IEC 61000-4-4	± 2 kV for power supply lines ± 1 kV for input/output lines	± 2 kV for power supply lines

Surge IEC 61000-4-5	± 1 kV differential mode ± 2 kV common mode	±1kV differential mode
Voltage dips, short interruptions and voltage variations on power supply input lines IEC 61000-4-11	< 5 % U_T (>95 % dip in U_T) for 0.5 cycle 40 % U_T (60 % dip in U_T) for 5 cycles 70 % U_T (30 % dip in U_T) for 25 cycles < 5 % U_T (>95 % dip in U_T) for 5 sec	< 5 % U_T (>95 % dip in U_T) for 0.5 cycle 40 % U_T (60 % dip in U_T) for 5 cycles 70 % U_T (30 % dip in U_T) for 25 cycles < 5 % U_T (>95 % dip in U_T) for 5 sec
Power frequency (50/60 Hz) magnetic field IEC 61000-4-8	30 A/m	30A/m
NOTE	U_T is the a. c. mains voltage prior to application of the test level.	

Guidance and manufacturer´s declaration – electromagnetic immunity –
for EQUIPMENT and SYSTEM that are not LIFE-SUPPORTING

Guidance and manufacturer´s declaration – electromagnetic immunity		
The arm type blood pressure monitor is intended for use in the electromagnetic environment specified below. The customer or the user of the arm type blood pressure monitor should assure that it is used in such an environment.		
Immunity test	**EN 60601 test level**	**Compliance level**
Conducted RF IEC 61000-4-6	3 V 0, 15 MHz -80 MHz 6 V in ISM and amateur radio bands between 0, 15 MHz and 80 MHz	3 V 0, 15 MHz -80 MHz 6 V in ISM and amateur radio bands between 0, 15 MHz and 80 MHz

	80 % AM at 1 kHz	80 % AM at 1 kHz
Radiated RF EM fields IEC 61000-4-3	10 V/m 80 MHz -2,7 GHz 80 % AM at 1 kHz	10 V/m 80 MHz -2,7 GHz 80 % AM at 1 kHz

Table 9 - Test specifications for enclosure port immunity to RF wireless communications equipment

Test frequency (MHz)	Band[a)] (MHz)	Service[a)]	Modulation [b)]	Maximum power (W)	Distance (m)	**IMMUNITY TEST LEVEL** (V/m)
385	380 -390	TETRA 400	Pulse modulation [b)] 18 Hz	1,8	0.3	27
450	430 - 470	GMRS 460, FRS 460	FM[c)] ± 5 kHz deviation 1 kHz sine	2	0.3	28
710	704 - 787	LTE Band 13, 17	Pulse modulation [b)] 217 Hz	0,2	0.3	9
745						
780						
810	800 - 960	GSM 800/900. TETRA 800, iDEN 820, CDMA 850, LTE Band 5	Pulse modulation [b)] 18 Hz	2	0,3	28
870						
930						
1 720	1 700-1 990	GSM 1800; CDMA 1900; GSM 1900; DECT; LTE Band 1, 3 4, 25; UMTS	Pulse modulation [b)] 217 Hz	2	0,3	28
1 845						
1 970						

2 450	2 400-2 570	Bluetooth, WLAN, 802.11 b/g/n, RFID 2450, LTE Band 7	Pulse modulation [b] 217 Hz	2	0,3	28
5 240	5 100-5 800	WLAN 802.11 a/n	Pulse modulation [b] 217 Hz	0,2	0.3	9
5 500						
5 785						

NOTE:
If necessary to achieve the immunity test level, the distance between the transmitting antenna and the me equipment or me system may be reduced to 1 m. The 1 m test distance is permitted by IEC 61000-4-3.
a) For some services, only the uplink frequencies are included.
b) The carrier shall be modulated using a 50 % duty cycle square wave signal.
c) As an alternative to FM modulation, 50 % pulse modulation at 18 Hz may be used because while it does not represent actual modulation, it would be worst case.

Precautions for use

According to IEC60601-1-2, blood pressure monitor complies with all applicable electromagnetic compatibility (EMC) requirements. It may have harmful interference with other devices if you do not follow the instructions. However, there is not certain it has not interference with other devices if you following the instructions. If it does have interference with other device, you can amend interference by the following methods.

1. Enlarge the distance between this device and other device.
2. Connect the two devices with different power socket.

Essential performance and basic safety testing should be done every two years. If your device needs to be done, please contact your provider or the company. This device only can be tested by the provider who has be authorized.

Appendix

I.Product Specifications

Name	Arm-type Blood Pressure Monitor

Display	Segment LED Display		
Prevent into the liquid level	IP21		
Measurement	Upper Arm		
Measurement Range	NIBP(Non Invasive Blood Pressure)	Static pressure measurement range：0-280 mmHg	
	PR(Pulse rate)	40-199 bpm	
Accuracy	NIBP(Non Invasive Blood Pressure)	≤±3mm Hg(±0.4kPa)	
	PR(Pulse rate)	±5%	
Battery powered	Lithium battery specifications 3.7V 700mAh		
Adapter	INPUT AC100-240V 50/60Hz OUTPUT DC5.0V		
Electrical parameters	Working Voltage	3.7V	
	Low electrical parameters	3.4V±0.2V showing low power	
	Auto power-off	Power off automatically within 2 minutes without any operation	
Dimension	Approximately120*70*50（mm）		
Weight	Approximately 180g		
Working Condition	Temperature	+5ºC～40 ºC	If stored or used outside the specified temperature and humidity range, blood pressure will not work properly.
	Humidity	15%RH～85%RH	
	Atmospheric	86kPa～105kPa	
Transporting and storaging Condition	Temperature	-20ºC~+55ºC	Avoiding strong impact, direct impact, exposure or rain when Transporting.
	Humidity	10%RH～95%RH	
	Atmospheric	50kPa~105kPa	Packed blood pressure monitor should be storaged in the condition met the humidity and atmospheric requirements,and non-corrosive gases and ventilated room.

Security Type	Internally powered(When using an adapter, it belongs to class II, internal power supply), BF type application equipment
Service life	5 years
Cuff specification	Dimension:Cuff:arm circumference 22-36cm
Applied parts specified	cuff
Pollution degree	Pollution degree2:Micro-environment with non-conductive pollution,expect occasional conductivity caused by condensation
Overvoltage category classification	Class II
Use specification	1、Expected medical instructions: The blood pressure monitor is used for measuring blood pressure and pulse rate. 2、Intended Patients: Adults 3、Expected use or interaction with body parts tissue type: Upper Arm 4、Intended users: Healthcare personnel or adult user 5、Application environment: Avoid electromagnetic interference Extreme temperature Avoid pollution and dust Avoid direct sunlight, etc Operating principle: Using the oscillometric method of measurement, the blood pressure monitor uses an air pump to inflate and pressurize the cuff, and use the inflatable cuff to compress the arteries to make the arteries in a state of complete obstruction, and then open the deflation valve to slowly decrease the pressure in the cuff .
The RATED range of CUFF pressure	0-300mmHg

Over the temperature range of 10℃ C to 40℃ and the relative humidity range of 15% to 85% (non-condensing), the maximum error for the measurement of the CUFF pressure at any point of the NOMINAL measurement range	≤±3 mmHg
When the SUPPLY MAINS to the blood pressure monitor is interrupted	the CUFF shall deflate within 30 s to the values indicated in ≤15 mmHg, and any indication of BLOOD PRESSURE shall be cancelled
The laboratory reproducibility of the BLOOD PRESSURE DETERMINATION of the AUTOMATED SPHYGMOMANOMETER	≤3mmHg

II. Blood pressure classification instructions

Table 1 Blood pressure classification instructions

classification	High pressure	Low pressure
Serious	≥180	≥110
Moderate	160～179	100～109
Mild	140～159	90～99
little higher	130～139	85～89
Normal	120～129	80～84
Most suitable	≤119	≤79

III. Error message and the cause of error correspondence table

Table 2 Error message and the cause of error correspondence table

LED Error message	**the cause of error**

E0	The cuff is too loose. Please re-tie the cuff
E1	Due to the arm or body movement, the high pressure value can not be measured. Please tie the cuff and measure it once
E 2	Due to the arm or body movement, the low pressure value can not be measured. Please tie the cuff and measure it once
E3	The test result is abnormal, please measure again
E4	Because the air leakage rate is too fast or the pulse signal is too weak, please check the cuff and measure it again after binding

Services

1. One year free warranty period will be provided after sales.

2. Our company cannot provide the free warranty service due to the malfunction caused by personal reason, details as follow:

1）The malfunction caused by disassemble and modify the product.

2）The product inner malfunction caused by dropping while picking up or operating.

3）The malfunction caused by improper used or lack of reasonable cared.

4）The malfunction caused by operating not following the operator’s manual .

5）The malfunction caused by natural disasters, Such as flooding , fire.

6）The malfunction caused by improper repaired by repaired shop which isn’t our authorized.

3. Please show your valid warranty card and shopping vouchers when you need free sevice.

4. Please bring the product to repaired shop which is our authorized when you need free repaired.

5. When performing warranty service, if needed, you can provide information on product components to circuit diagrams and repairable identified by our qualified technical personnel.

6. We will collect reasonable charge when we repair some malfunctions which out warranty service.

Components

Components	Quantity

Host of arm type Blood Pressure Monitor	1
Power cord	1
User manual	1